TEHTY SUOMESSA
MADE IN FINLAND

MONDEX

INSTALLATION AND OPERATING INSTRUCTIONS

The Kaira heater

12/2017

Contents

1 General safety instructions ... 3
2 Kaira heater ... 4
3 Heater assembly and installation ... 5
Heater assembly ... 5
Stacking the stones ... 6
4 Technical specifications ... 7
Heater power and voltage ... 7
Heater dimensions ... 7
Required amount of stones ... 7
Minimum distances to inflammable material ... 7
5 General instructions for users of Kaira heaters ... 8
Note ... 8
Installation cable ... 8
Additional connection options ... 8
6 Things to keep in mind when using the heater ... 8
First heating ... 8
Sauna room ... 8
Temperature control ... 8
Heating time ... 8
Water thrown on heater ... 8
Sauna room structure ... 9
7 Installation instructions ... 10
Installation of external control and sensor ... 11
8 Wiring diagram ... 12
Controller card wiring, heater ... 12
Controller card wiring, controller ... 12
9 Embedding the Kaira heater into a bench ... 13
10 Heater control and operation ... 14
First time use of the heater / calibration ... 14
Resetting the heater ... 14
Error codes ... 14
Overheating protector ... 14
11 Troubleshooting ... 15
Heater does not heat up ... 15
Warnings ... 15
Warranty ... 15
Maintenance; spare parts ... 15
Natural stone as material ... 15
Changing the heater stones ... 15
12 Service history ... 16

1. General safety information

To ensure safe use of the sauna, please read these safety instructions first!

Electrical connections may only be carried out by an electrician with valid installation authorization according to the current regulations.

The Mondex electric heater is suitable for use in a family sauna, one (1) heater per sauna room. Retain the installation and operating instructions for further reference.

Always check the adequacy of the fire protection distances!

Failure to observe the connection instructions may result in a risk of fire!

Always check the sauna room before switching the heater on!

Always check that the controller has switched the heater off after the set time period!

Due to the risk of fire, do not use the sauna to dry clothes or laundry.

Exercise caution with a hot heater, since the heater stones and metal parts become very hot and can cause burns.

Steam from the heater is burning hot and may cause severe burns.

Children, disabled and ill persons who are using the sauna should be supervised.

Benches and floors may be slippery, therefore move in the sauna with caution.

Do not go to a hot sauna under the influence of narcotic substances (alcohol, drugs, narcotics, etc.).

A stone compartment without stones or filled improperly will present a risk of fire!

Covering the heater will present a risk of fire.

This device is not intended for use by children or persons whose physical, sensory or mental abilities or lack of experience and knowledge prevent them from using the device safely, without the supervision of a person responsible for their safety or before they have been instructed on how to use the device.

Children should be supervised to ensure that they do not play with the device.

This device complies with the requirements of: CE PG МЛ04

Mondex pursues an active policy of product development and continuous improvement. For this reason, Mondex reserves the right to make changes relating to the design and technical specifications of their products without prior notice.

2. Kaira heater

Kaira heater with a jacket:
for embedding into a bench.

Kaira heater without a jacket:
for free-standing installation.

3. Heater assembly and installation

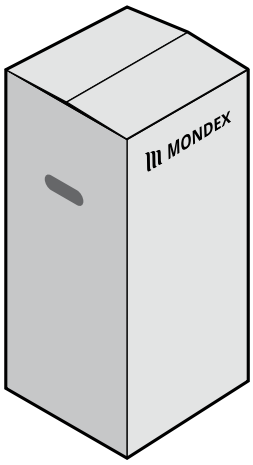

Heater assembly

1) Keep the heater in its original package in an upright position in a warm and dry location until it is installed.

2) The package includes the heater, thermostat sensor, electronic controller and the required cables. Inspect the heater components visually. If you notice any discrepancies, please contact the store from which you purchased the heater. Do not expose heater parts to blows and denting when taking it out of the package. The sauna's floor surface should also be properly protected before you begin the installation.

3) **Do not lift the heater by the jacket**.

4) An electrician should connect the wires before the heater is installed. If needed, the position of the heater can be fine-tuned by using the adjustable legs. Observe the safety distances between the heater and any inflammable material in accordance with table 4.4 on page 7.

Figure 1. Ensure that the thermal shield aperture is positioned correctly.

5) Place the heater on the floor and adjust the legs so that the heater stands straight.

6) When embedding the heater into the bench, note that the upper end of the thermal shield inside the heater must be 5 mm below the top surface of the bench, at a maximum.

7) Ensure that the thermal shield aperture is positioned correctly (see Figure 1).

8) Free-standing installation of the heater is also possible. In a free-standing installation, the heater must be supported properly with the support iron provided.
Note: remove all plastic films before using the heater!

9) In a free-standing installation, the thermal shield inside the heater can be removed and the entire lower part of the heater can be filled with stones.

The diameter of the opening in the bench is 343 mm.

Stacking the stones

Note! Use regular olivine diabase granite heater stones with diameter of less than 10 cm in the Kaira heater. Wear protective gloves when laying the stones. Stack the stones so that the resistors remain upright and straight. Do not bend the resistors so that they are in contact with the metal structures of the heater. **You want to stack the stones along the heater's outer frame as tightly as possible and leave more space between the inner stones.**

A wall of tightly stacked stones prevents thermal radiation from overheating the materials around the heater.

The more loosely stacked inner stones let air flow through the heater, heating the stones and, subsequently, the sauna room effectively.

Stacking the heater stones

1) Place the stones into the stone compartment carefully – do not drop them. Do not wedge stones tightly between the resistors.

2) Begin stacking the stones from the centre, on the inside of the resistors.

3) When stacking stones on the inside of the resistors, ensure that the stones are not stacked too tightly. Stacking them too tightly will cause the resistors to bend and touch each other or the heater frame.

4) If the thermal shield inside the heater is removed (note the safety distances!), you can also fill the bottom of the heater with stones. To facilitate stacking, you can remove the top of the heater by detaching four screws.

5) If the bottom is filled with stones, the outer jacket may also be removed at the user's discretion (note the safety distances!).

6) Do not place any objects or devices in or near the heater's stone compartment which would alter the air flow through the heater.

7) **An exposed, hot resistor may cause materials even outside the heater's safety distances to become dangerously hot. Ensure that the resistors are properly covered with stones.**

Note! Do not remove the bands around the resistors. If there are two bands, one of them is located at approximately 20 cm from the bottom and another from approximately 10–15 from the top. They keep the resistors apart from each other and prevent premature deterioration.

Dents caused by the user or others are not covered by Mondex's warranty or other product liability. When stacking the stones, be careful not to dent the heater's metal surfaces to avoid damaging them. For more information on the warranty and replacing stones, see page 14.

4. Technical specifications

Heater	Kaira 6.6	Kaira 9.0
Power kW	6.6	9.0
Voltage	400 V 3N	400 V 3N
Connecting cable	5 x 1,5 mm²	5 x 2,5 mm²
Fuse	3 x 10 A	3 x 16 A

Table 4.1

Heater dimensions (mm)

Type	Width	Depth	Height
Kaira 6.6	335	335	1130
Kaira 9.0	335	335	1130

Table 4.2

Amount of stones

Type	Stone amount (kg)
Kaira 6.6	60/100
Kaira 9.0	60/100

Table 4.3

Minimum distances to inflammable material (mm)

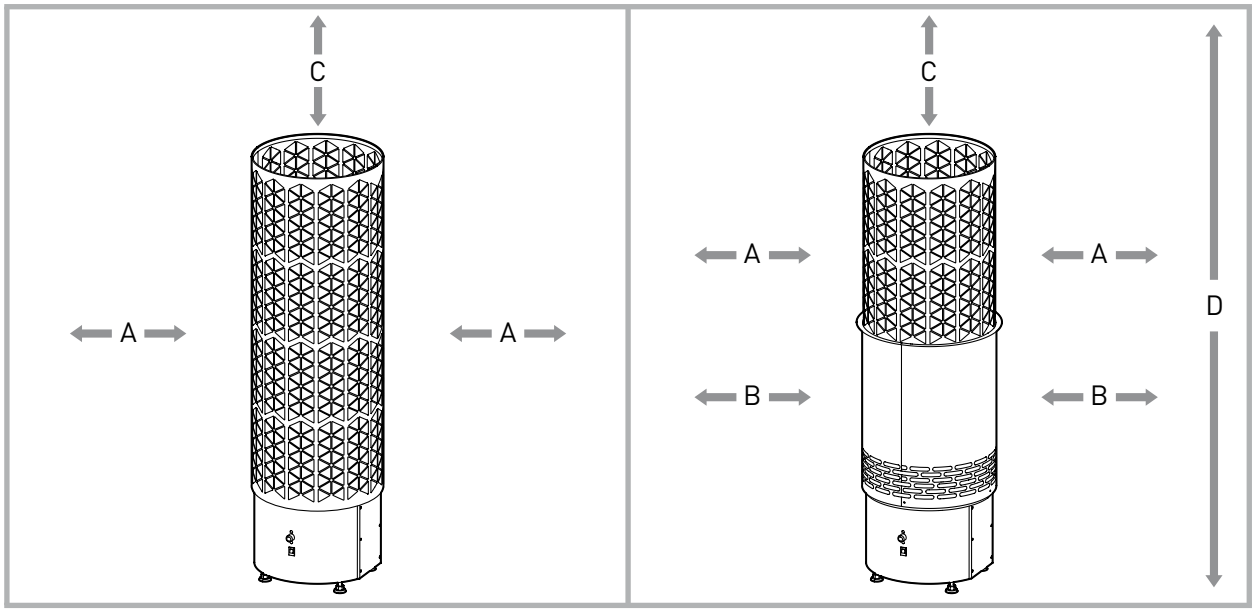

Type	A	B	C	D	Volume
Kaira 6.6	100	4*	770	1900	6–9 m³
Kaira 9.0	120	4	770	1900	8–15 m³

* The safety distance of a heater with the outer jacket in place, embedded into a bench, is 4 mm at the jacket. The diameter of the opening 343 mm.

Table 4.4 Minimum distances to inflammable material (mm)

5. General instructions for the users of Kaira heaters

Note

Electrical connections may only be carried out by an electrician with valid installation authorization according to the current regulations. The Kaira electric heater is suitable for use in a family sauna, one (1) heater per sauna room. Retain the installation and operating instructions for further reference.

Installation cable

Use rubber cable H07RN-F as a connection cable.

Additional connection options

Control of electric heating with the heater: The electric heating control cable is brought directly to the heater's junction box and further to the heater's terminal block with a rubber cable that is dimensionally identical to the incoming cable.

NOTE! Failure to observe the connection instructions may result in a risk of fire!

NOTE! Remove all plastic film before using the heater!

6. Things to keep in mind when using the heater

First heating

During the first heating, the resistors may emit fumes. Therefore, ensure that the room is properly ventilated. NOTE! See also the first time use of the heater on p. 13!

Sauna room

Always check the sauna room before switching the heater on! Always make sure that the timer has switched the power off after the set time period!

Temperature control

The temperature is adjusted by means of the control panel (see page 13). The actual heating time depends on the dimensions, structure and thermal insulation of the sauna. The temperature in the sauna room can be maintained at the desired level with the thermostat. If the temperature of the sauna room becomes dangerously high for any reason, the overheating protector will switch the heater's power off. The cause of overheating must always be investigated. The power can be switched on again by pressing the overheating protector reset button (see page 13).

Heating time

An excessive heating time consumes energy and does not improve the steaming properties. The best steam is achieved by keeping the sauna's heating time relatively short, at about 30–60 min., according to the size of the sauna and the heater's power. The size of the sauna, the glass door, windows, or materials used may require a longer heating time.

Water thrown onto the heater

We recommend using hand warm water. The water should be fresh household water. Throwing the water onto the heater sides / lower stones generates softer steam. If you want steam that feels hotter and more intense, pour plenty of warm water on top of the heater all at once.

Sauna room structure

The sauna and its ceiling, in particular, should have good thermal insulation, as heat tends to escape through the ceiling. Due to the moisture, we recommend that you use aluminium paper. The size of the heater should be selected according to the size of the sauna (in cubic metres). In addition to calculating the power need for the regular sauna structure (glass wool–foil–wood), the following should be taken into consideration. If the sauna has any uninsulated wood, tile or concrete surfaces or the walls are made of logs, the heater power needs to be increased. For every uninsulated square metre, the heater power need increases by the same amount as if increasing the space volume by 1.2 m^3 and on timber surfaces by 1.5 m^3. The factor for glass surfaces (glass walls, doors and uninsulated stone surfaces) is also 1.2 m^3 per square metre. In borderline cases, you should choose a heater with higher power.

The sauna needs efficient ventilation for a good oxygen level and a sufficient amount of fresh air. The air in the sauna needs to change at least 6 times per hour. For a sauna with an electric heater, mechanical ventilation is the most convenient ventilation method. The supply air should be provided through an inlet located 500 mm, at a minimum, above the heater, either on the wall or in the ceiling. The exhaust valve should be placed on the opposite wall, as far away from the heater and as close to the floor level as possible. It is highly recommendable to install an exhaust air valve in the ceiling as well for an easier removal of moisture after sauna sessions.

For more information, refer to the construction instructions and building regulations.

7. Installation instructions

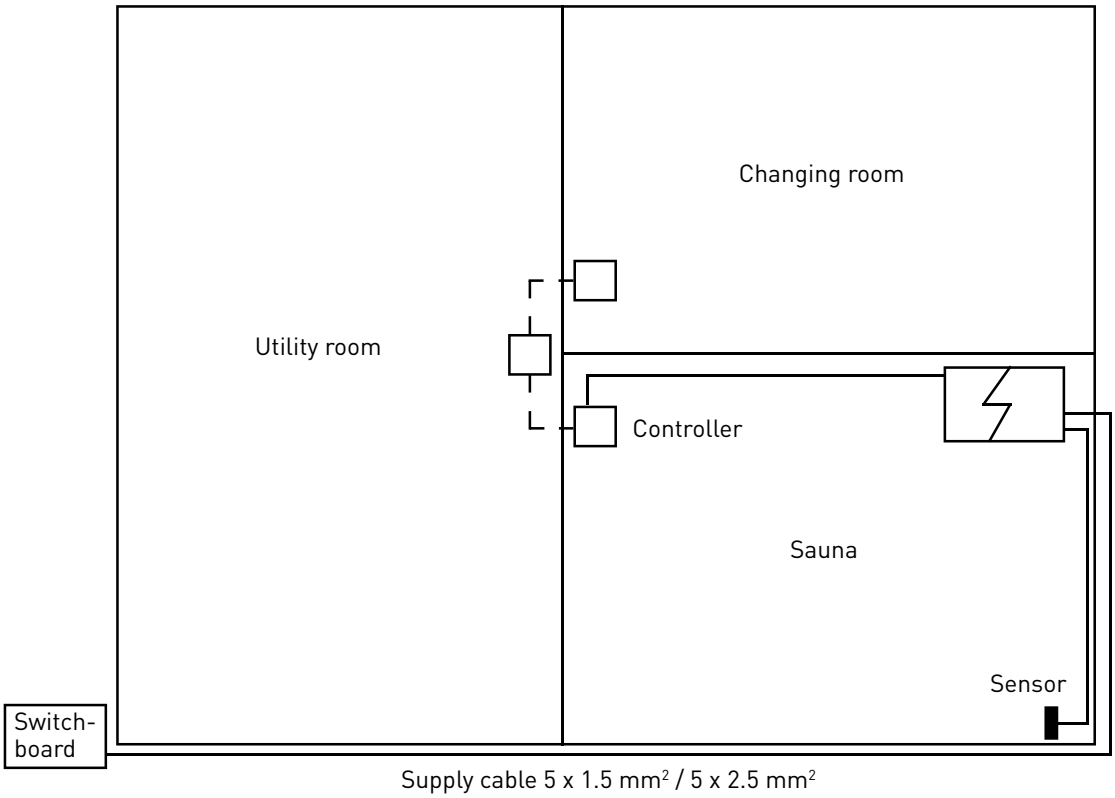

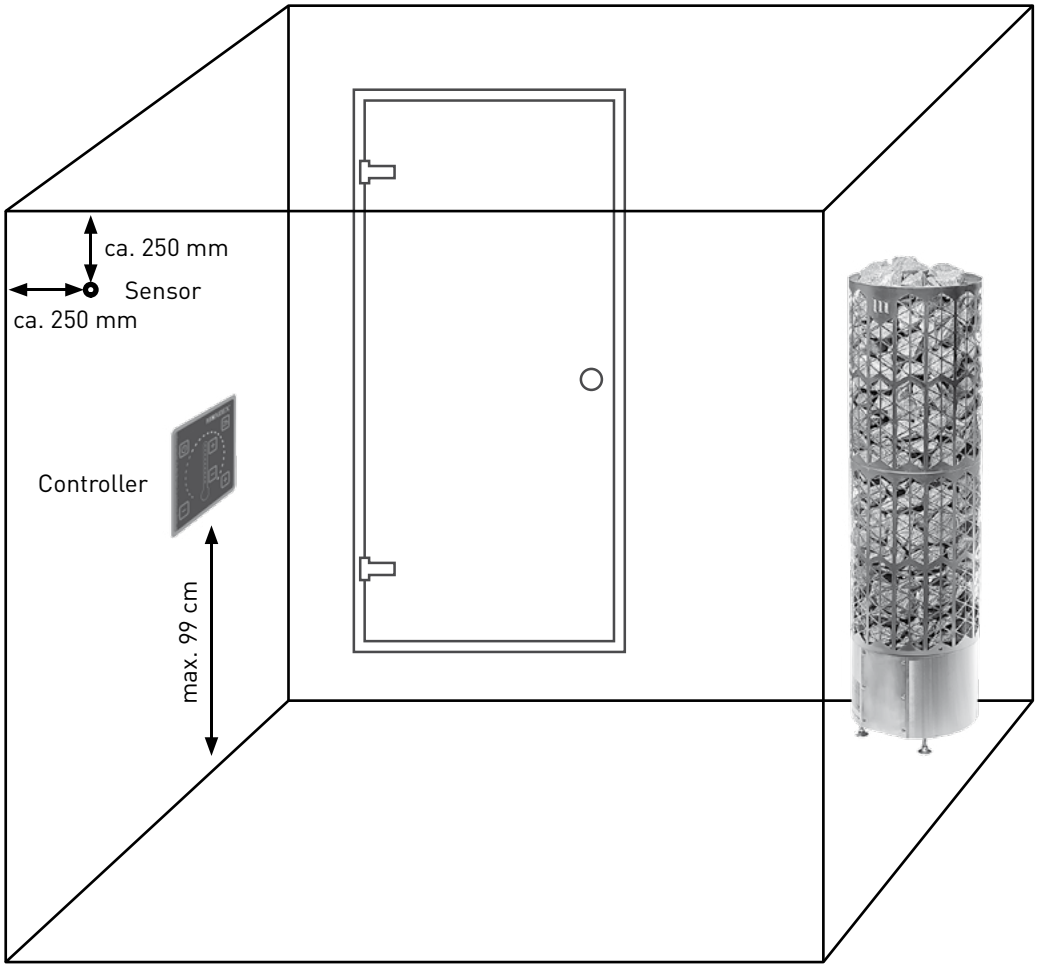

Installation of external control and sensor

Included in the package:

Controller

Sensor

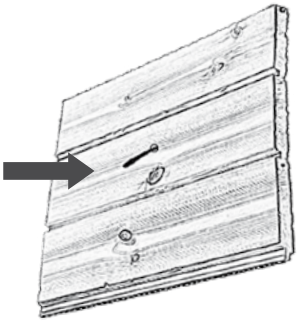

The most suitable location for installing the wall sensor is on the wall where the benches are mounted. Its distance to the ventilation duct should be at least 50 mm.

Drill a 3.5 mm hole in the wall panel and route the wire under the panel to the heater. Ensure that approximately 10 mm of the sensor remains visible. If needed, the sensor can be attached to the hole with a small drop of silicone adhesive. The length of the sensor cable is 6 m. Cut the excess wire and connect the other end to the heater. **Ensure that a minimum of 7 mm of the end of the wire is stripped to ensure a proper contact.**

The wall mounting plate is either mounted to the wall using three screws or affixed to the bottom of the mounting box. The mounting plate is covered first with a cover plate and finally with the control panel. The length of the sensor cable is 8 m. Cut the excess wire and connect the other end to the heater. When installing the control panel, make sure that the cables do not become detached or bend.

NOTE!
Remove the plastic protection film of the control panel before using the heater.

8. Wiring diagram

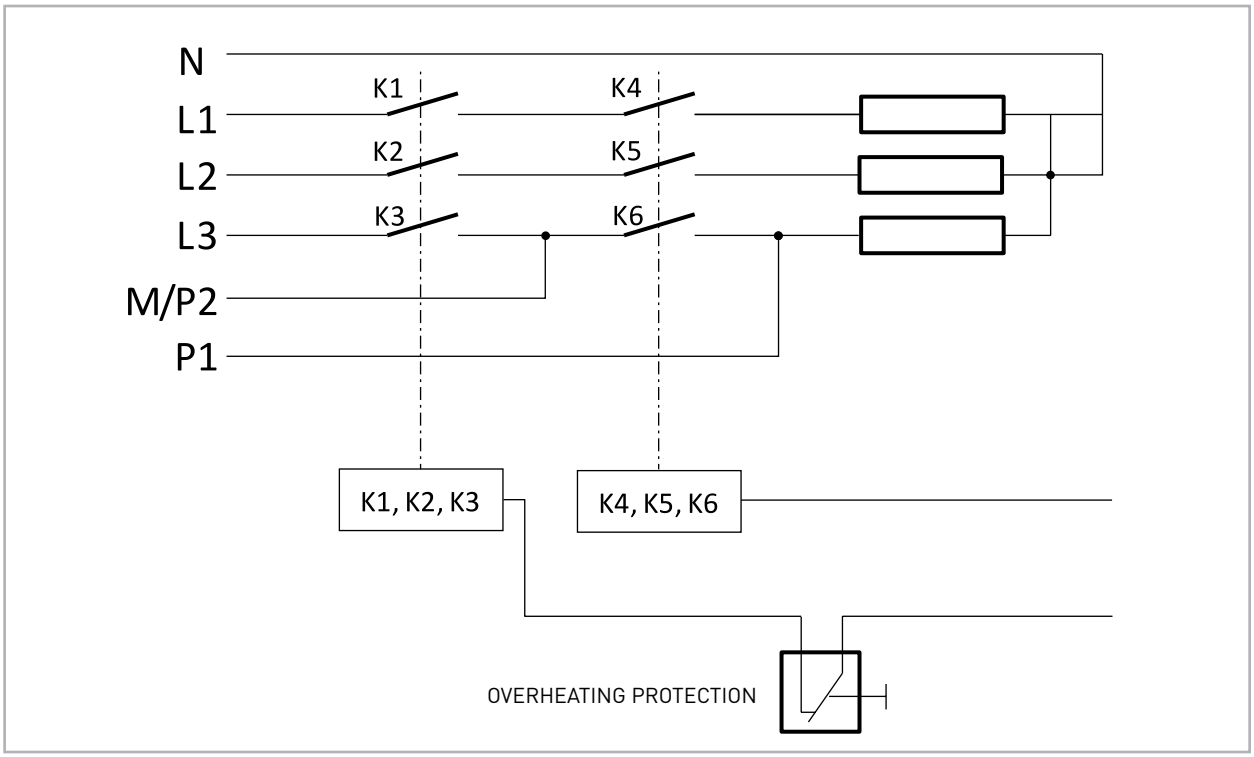

Controller card wiring, heater

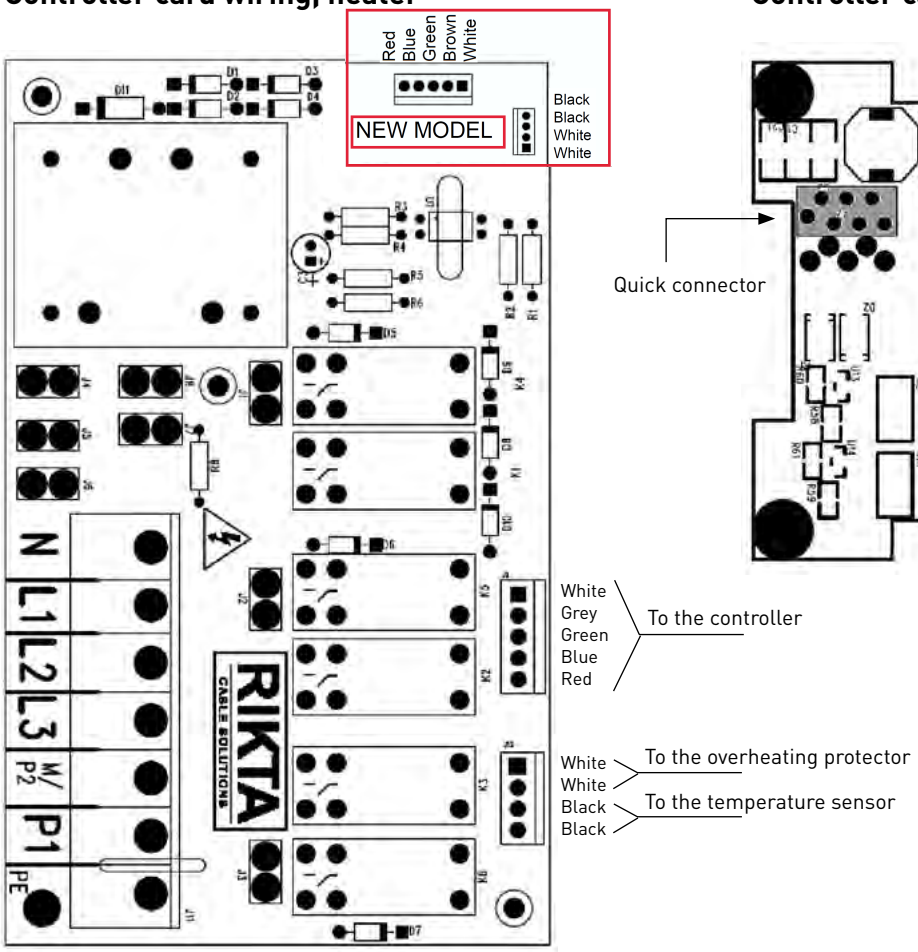

Controller card wiring, controller

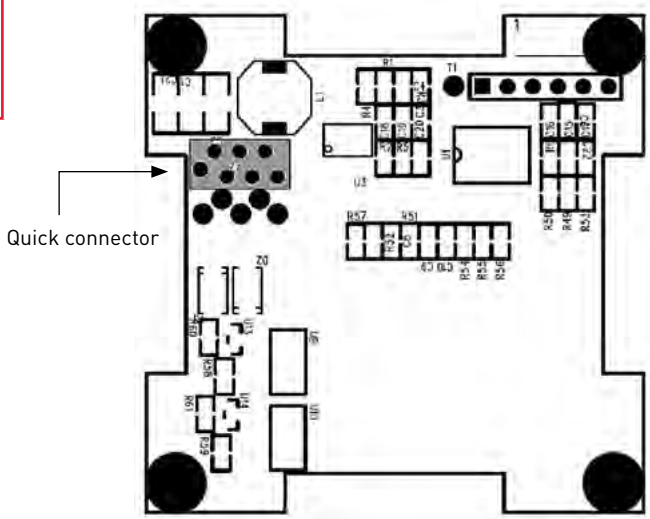

9. Embedding the Kaira heater into the sauna bench

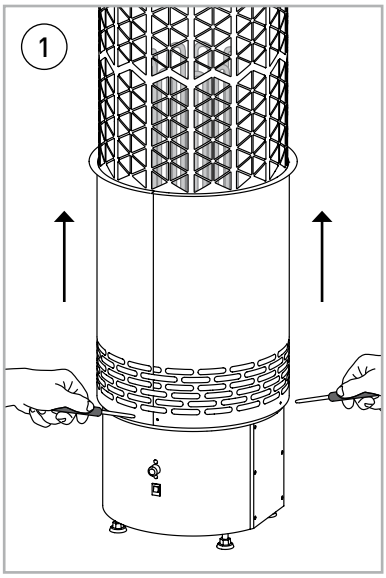

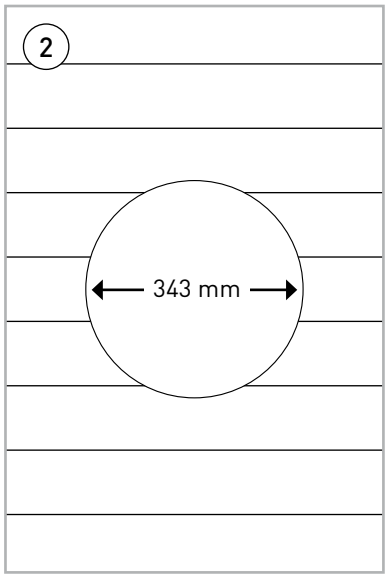

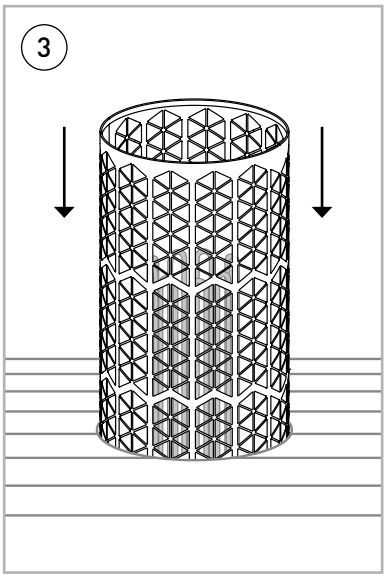

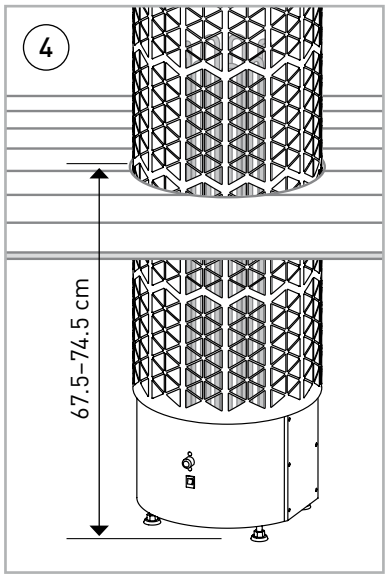

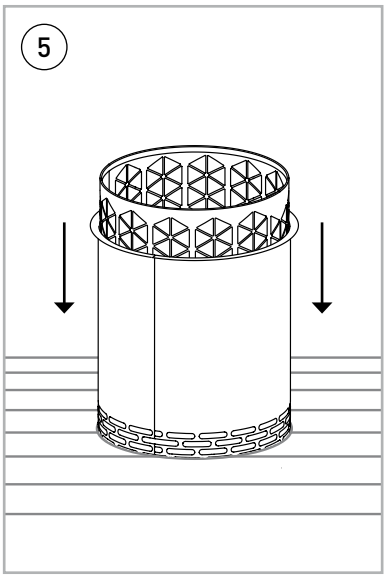

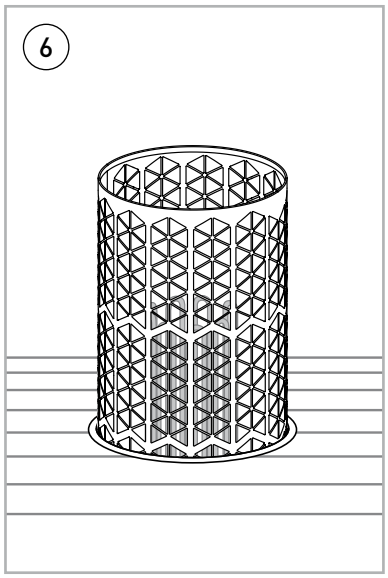

1) Remove the heater's outer jacket by detaching the four screws from the bottom end of the jacket and lifting the jacket up. Ensure that the heater's thermal shield aperture is positioned correctly (see Figure 1, page 5).

2) Make an opening of 343 mm in diameter in the bench.

3) Lower the heater into the opening.

4) Adjust the heater's inner thermal shield to the same height as the board of the lower bench by turning the adjustable feet.

   NOTE! If the thermal shield remains below the board, the bench may overheat. The height of the lower bench may be 675–745 mm.

5) Finally, place the outer jacket over the heater so that the lip at the top covers the saw cut and the jacket extends below the bench.

6) The heater stones can now be stacked inside the heater. Note that the part of an embedded Kaira heater that remains below the bench is not filled with stones, with the exception of the area in the centre of the resistors.

7) The heater is now ready to use.

10. Heater control and operation

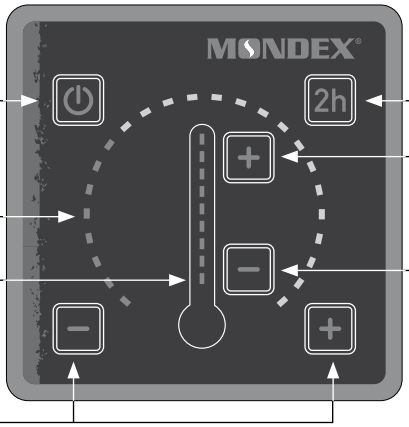

Power switch

Operating time

Temperature

Operating time adjustment

Quick start

Temperature control

The heater is operated by adjusting its operating time and temperature, and then by switching the heater on from the power switch.

Normal start: Select the operating time with the control buttons.

The operating time is displayed in light bars. One bar equals 30 min. The maximum operating time is 4h.

Quick start: Press the quick start button. The heater will remain on for two hours.

Temperature control: Set the desired temperature with the control buttons.

One light bar affects the temperature by approximately 5°C.

Heater start-up: When the operating time and temperature have been set, switch on the heater from the power switch. NOTE! If the power switch is not pressed, the controller lights will keep blinking. NOTE! The heater will remember the previous temperature setting.

Timer function: You can set the heater to switch on in 30 min. – 8 hours. After that, the heater will remain on for 4 hours.

- Keep the operating time controller depressed until the red lights turn off.
- After this, the light bars will turn blue and each bar represents a period of 30 min.
- Select the desired temperature for the sauna with the temperature control buttons.
- You can switch off the heater at any time by pressing the power switch.

First time use of the heater (heater calibration)

Ensure that the main switch on the side of the heater is in the "I" position. Set the temperature to two LED lights from the bottom. Press the quick start button (**2h**). Switch the heater on by pressing the power switch in the upper left-hand corner. When 2 hours have elapsed or the blue LED light at the lower right-hand corner has turned off, the heater calibration is complete. Do not open the sauna door during the calibration. During the calibration, the heater "teaches itself" to heat up optimally according to the size of the sauna. The heater can be used normally after the calibration. NOTE! The heater must be filled with heater stones before the first use (calibration).

Resetting the heater

Switch off the heater from the main switch located on the lower right-hand side of the heater. Keep the temperature control **+** and **–** buttons depressed. Switch the main switch of the heater on again while keeping the **+** and **–** buttons depressed. The heater is now ready for calibration. For calibration instructions, see "First-time use of the heater (heater calibration)".

Error codes

If the heater encounters an error, the electronics will turn off the resistors and indicate the controller faults with blue lights as follows:

4th light from bottom:
Relay fault

3rd light from bottom:
Short circuit of the thermal sensor

2nd light from bottom:
Contact failure of the thermal sensor

1st light from bottom:
Calibration status

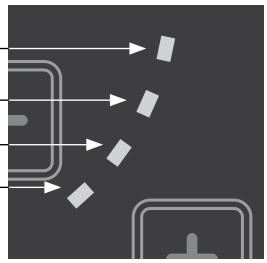

Overheating protector

The overheating protector reset button is located above the heater's main power switch under a protective cap. Twist the cap to open. The red reset button located under the cap is 3.5 mm thick.

11. Troubleshooting

Heater does not warm up

Is the power on?

Has the overheating protector tripped?
→This is reset by pressing the overheating protector reset switch with a sharp object until a click is heard. The cause of overheating must always be determined before the heater is switched on again!

If necessary, contact the dealer or manufacturer.

Warnings

- Due to a risk of fire, do not use the sauna to dry clothes or laundry.
- Exercise caution with a hot heater, since the heater stones and metal parts become very hot and can cause burns.
- The water steam rising from the heater is hot and can cause burns.
- Children, disabled and ill persons who are using the sauna should be supervised.
- Benches and floors may be slippery, therefore move in the sauna with caution.
- Do not go to a hot sauna under the influence of narcotic substances (alcohol, drugs, narcotics, etc.)

Warranty

For heaters and control units in private use, the warranty is two (2) years. In commercial/professional use, the warranty is three (3) years. Commercial use refers to facilities in which the heater is in use on a continuous basis, such as fitness centres, swimming pools, housing companies etc. It is not recommended that the heater is on for longer than six (6) hours at a time. Retain the sales receipt or warranty card. The warranty does not cover external or internal mechanical damage caused by, for example, the impacts of stones or the heater falling over. The warranty also does not cover defects caused by acts of nature, such as lighting or damage caused by overvoltage. Please also see chapter "Changing the heater stones". **Removing or re-stacking of heater stones are not covered by the warranty in a potential warranty maintenance.**

Maintenance and spare parts

In case of a fault that cannot be solved, please contact the manufacturer's technical support, tel. +358 500 889 559. Spare parts can be purchased from Mondex distributors and the manufacturer. When purchasing spare parts, please refer to the name, power, serial number and manufacturing date of the heater to ensure you receive the correct parts.

Natural stone as material

Small pebbles or pieces may come off the natural stone used in the heater. As this is not a failure of the organic material but a natural feature that cannot be predicted at the time of manufacturing the product, the manufacturer is not responsible for any damage.

Changing the heater stones

Re-stack the heater stones and replace any eroded stones annually (every three months in commercial/professional use). The good condition and proper, spacious stacking of the stones around the resistors inside the heater ensure a sufficient air flow between the resistors. If this is not carried out annually, a proper air flow may be obstructed and the resistors may break prematurely, which is not covered by the warranty.

Heater maintenance history

We recommend changing the heater stones at one-year intervals.

Date	Procedure

MONDEX

TEHTY SUOMESSA
MADE IN FINLAND

Premec Oy
Kettukallionkatu 4
84100 Ylivieska, Finland
info@mondex.fi
www.mondex.fi

Technical support: info@mondex.fi