TEHTY SUOMESSA
MADE IN FINLAND

MONDEX

INSTALLATION AND OPERATING INSTRUCTIONS

Motti heater

09/2020

Contents

1 General safety instructions ... 3
2 Motti heater ... 4
Heater components ... 4
3 Technical specifications ... 5
Rated power, efficiency, emissions, average temperature of flue gases ... 5
Heater dimensions, weight and required quantity of stones ... 5
4 Sauna room ... 6
Sauna room ventilation ... 6
Keeping the sauna room clean ... 6
Floor protection ... 6
Safety distances ... 7
Light protective material ... 8
5 Heater assembly and installation ... 9
Before installation ... 9
Preheating ... 9
Chimney flue ... 10
Connecting the heater to a brickwork flue ... 10
Changing the handing of the door ... 11
Switching the side of the water tank ... 11
Stacking the stones ... 12
Fuel ... 12
Installing a tap in the model with a water tank ... 12
6 Using the Motti heater ... 13
Heating up the heater ... 13
Water thrown on heater ... 13
Maintenance and service ... 14
Maintenance, spare parts ... 14
Warranty ... 14
Changing the heater stones ... 14
7 Troubleshooting ... 15
No draught in chimney, smoke enters the sauna ... 15
Sauna fails to heat ... 15
Heater stones fail to heat ... 15
Heater generates odours ... 15
Effect of heating on the sauna room ... 15
8 Service history ... 16

1. General safety information

Please read the operating instructions carefully before using the heater!

Always check the adequacy of the fire protection distances!

Failure to observe the connection instructions may result in a risk of fire!

Always check the sauna room before operating the heater!

Due to the risk of fire, do not use the sauna to dry clothes or laundry.

Exercise caution with a hot heater, since the heater stones and metal parts become very hot and can cause burns.

Steam from the heater is burning hot and may cause severe burns.

Children, disabled and ill persons who are using the sauna should be supervised.

Benches and floors may be slippery, therefore move in the sauna with caution.

Do not go to a hot sauna under the influence of narcotic substances (alcohol, drugs, narcotics, etc.).

A stone compartment without stones or filled improperly will present a risk of fire!

Covering the heater is a fire hazard.

Extended periods in a hot sauna will raise body temperature, which could be potentially dangerous.

Maritime and humid climates may corrode the metal surfaces of the heater.

This device is not intended for use by children or persons whose physical, sensory or mental abilities or lack of experience and knowledge prevent them from using the device safely, without the supervision of a person responsible for their safety or before they have been instructed on how to use the device.

Children should be supervised to ensure that they do not play with the device.

All local regulations, including those referring to local and European standards, must be complied with when installing a fireplace.

This device complies with the requirements of: CE

Mondex pursues an active policy of product development and continuous improvement. For this reason, Mondex reserves the right to make changes relating to the design and technical specifications of their products without prior notice.

2. Motti heater

Motti heater, steel

Motti heater, black

Motti heaters with a water tank: steel and black

Motti heater components

1) Firebox door (the handing can be changed)

2) Ash pan

3) Upper chimney duct

4) Rear chimney duct

5) Sweeping doors (2)

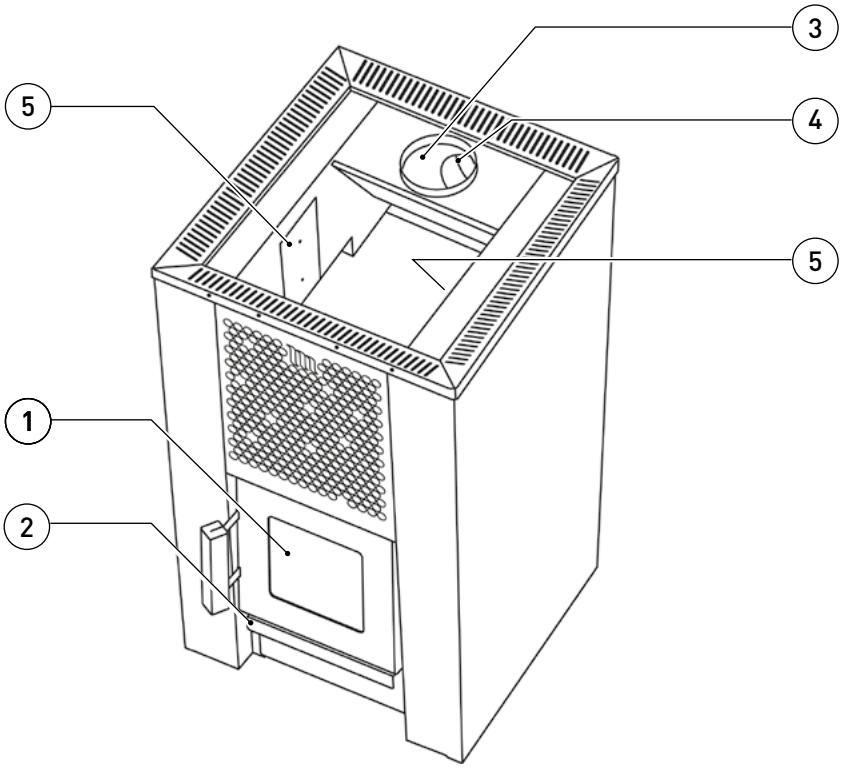

3. Technical specifications

Rated power, efficiency, emissions, average temperature of flue gases

Heater	Motti
Sauna size	12–22 m³
Rated power	22 kW
Efficiency	71%
CO content with an oxygen content of 13%	0.25 %
Flue gas temperature	325 °C
Flue gas flowrate	15.2 g/s
Total amount of wood / fillings / heating time	7 kg / 2 / 93 min
Heat production in the room	15.7 kW

Table 3.1

Heater dimensions

Type	Height (mm)	Width (mm)	Depth (mm)	Firebox cover thickness (mm)	Flue Ø (mm)
Motti	840	492	513	8	115
Motti with water tank	840	625	513	8	115

Table 3.2

Heater weight and number of stones

Type	Weight without stones (kg)	Stone amount (kg)	Stone size (cm)	Water tank volume (L)
Motti	80	60	10–15	–
Motti with water tank	85	60	10–15	20

Table 3.3

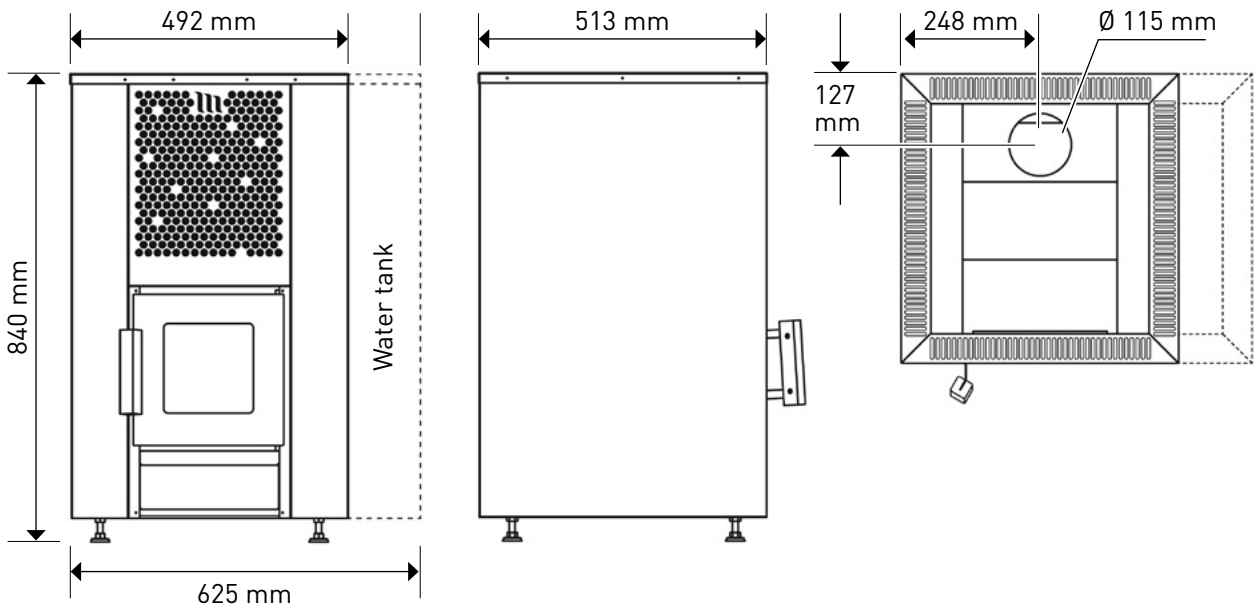

4. Sauna room

Sauna room ventilation

Gravity ventilation
The fresh supply air is conducted to just above the floor level near the heater, and the exhaust air exits as far as possible from the heater, near the ceiling. The heater circulates the air efficiently, so the exhaust air opening is mainly tasked with removing moisture from the sauna after bathing. The minimum diameter of the fresh supply air opening is 100 mm or equivalent.

Mechanical ventilation
The fresh supply air is conducted to approximately 500 mm above the heater and the exhaust air exits near the floor, for example, under the benches. The minimum diameter of the fresh supply air opening is 100 mm or equivalent.

Keeping the sauna room clean

We recommend that bench covers be used when bathing to prevent sweat from coming into contact with the benches. We recommend that the sauna benches, walls, and floor be washed every six months, at a minimum. The surfaces in the sauna should be washed with a scrubbing brush and a cleaning agent specifically intended for washing the sauna.

Protecting the floor

The heater must be installed on a floor with sufficient weight-carrying capacity.

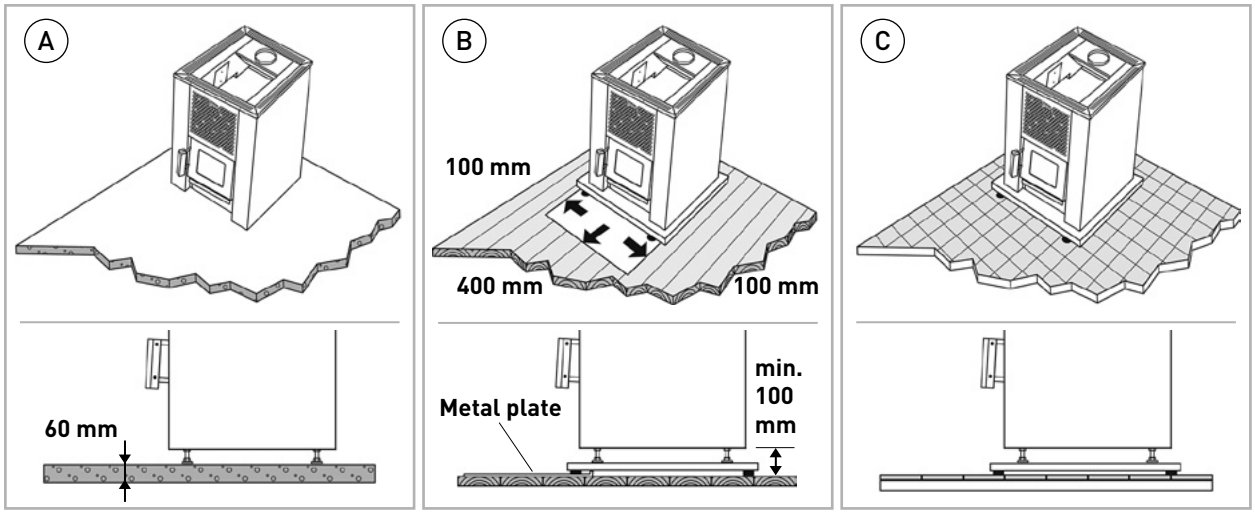

Concrete floor without tiles (A)
The heater can be installed directly on a concrete floor if the concrete slab thickness is a minimum of 60 mm. Make sure that there are no electrical wires or water pipes in the concrete cast under the heater.

Combustible floor material (B)
If the heater is installed on a floor made of material that is not fire-proof, you should use the Mondex stand for wood-fired heaters (or another product with equivalent properties). Install a metal plate in front of the stand that extends at least 100 mm to the sides of the heater's door and 400 mm in front of the heater. Bend the metal plate edge closest to the heater upward to prevent cinders from getting under the plate. The metal plate and the stand must be cleaned regularly to prevent any accumulated rubbish from catching fire.

Tile floor (C)
Floor glues and plasters and waterproofing materials used under the tiles do not withstand thermal radiation emitted by the heater. Protect the floor with a fireplace safety pad or equivalent protection against thermal radiation.

Safety distances

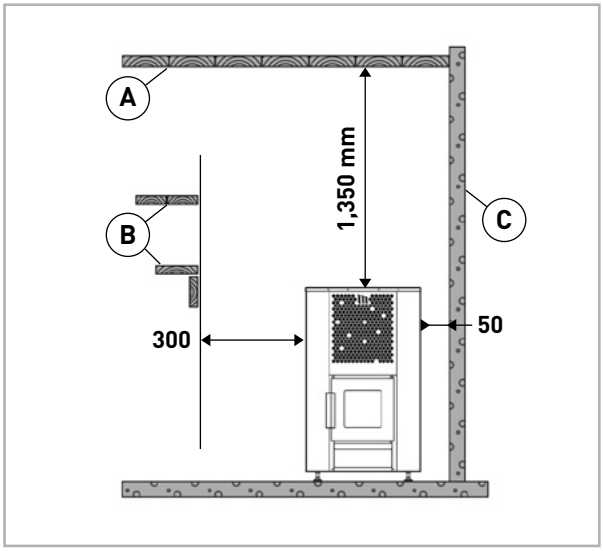

Ceiling (A)
The minimum safety distance from the top surface of the heater to the ceiling is 1350 mm.

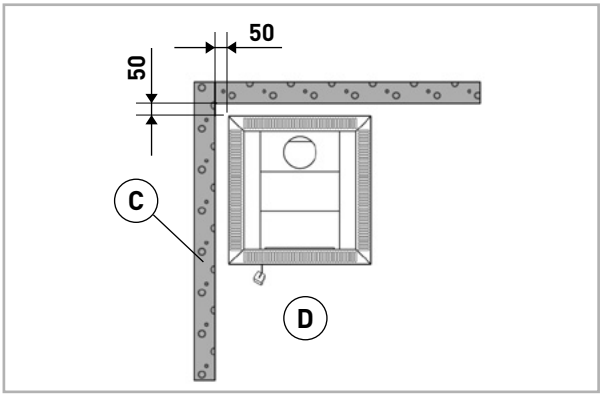

Masonry walls (C)
Leave a 50 mm gap between the heater and the wall. This requires that the front and one side of the heater are unobstructed the air to circulate.

The space required for operation and maintenance (D). The user of the heater needs at least 1 m^2 of space in front of the heater.

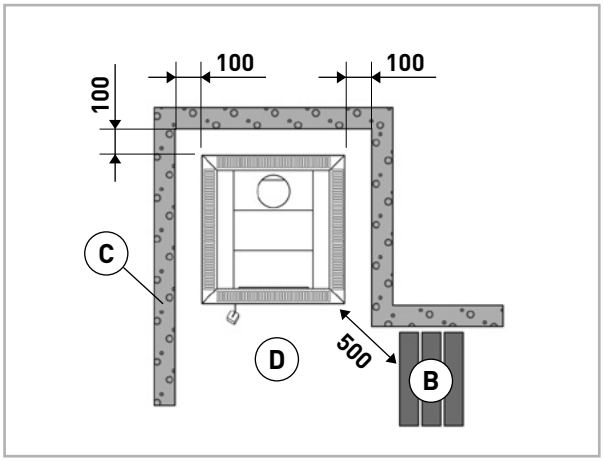

Heater in a recessed wall
If the heater is installed in a recessed wall, leave a 100 mm gap between the heater and the walls.

The space required for operation and maintenance (D). The user of the heater needs at least 1 m^2 of space in front of the heater.

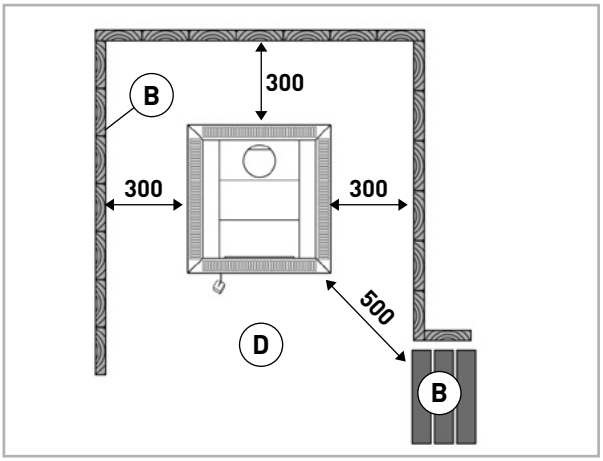

Walls and benches made of inflammable material (B)
The minimum safety distances between the heater and inflammable materials: 300 mm to the sides and rear, 500 mm to the front.

The space required for operation and maintenance (D). The user of the heater needs at least 1 m^2 of space in front of the heater.

Type	on the sides	in the front	in the rear	upward	Sauna size
Motti	300	500	300	1350	12–22 m^3

Table 4.3 Safety distances to inflammable material (mm) The safety distances are measured from the outer surfaces of the product.

* The safety distance on the side of the water tank is 150 mm.

Light protective material

Safety distances to inflammable materials may be reduced to a half by using a single layer of light protective material and to a quarter by using a double layer.

A single layer of light protective material (1x) can consist of a non-flammable, fibre-reinforced cement board (e.g. Minerit board) at least 7 mm thick or a metal plate at least 1 mm thick.

A double layer of light protective material (2x) can be made by using two boards of the above-mentioned materials. The fastening points must be sufficiently close to each other in order to ensure a stable structure.

Leave a gap of a minimum of 30 mm between the surface to be protected and the board(s). The light protective material should extend at least 250 mm above the heater.

A single layer of light protective material equals to brickwork of at least 55 mm thick. A double layer of light protective material equals to brickwork of at least 110 mm thick.

The brickwork must be open on the sides, and the distance to the surface being protected must be a minimum of 30 mm.

Heater installation

The adjustable feet of the heater allow you to install the heater directly and firmly even on an inclined floor surface.
The adjustment range is 50-80 mm. **Leave a gap of at least 50 mm between the heater and the floor**.

Screw the adjustable feet downwards so that you can rotate them with an open-end wrench, for example, when the heater is in place. Use a builder's level to ensure that the heater is level.

NOTE! The adjustable feet may scratch the surface of the floor if the heater is moved on the floor.

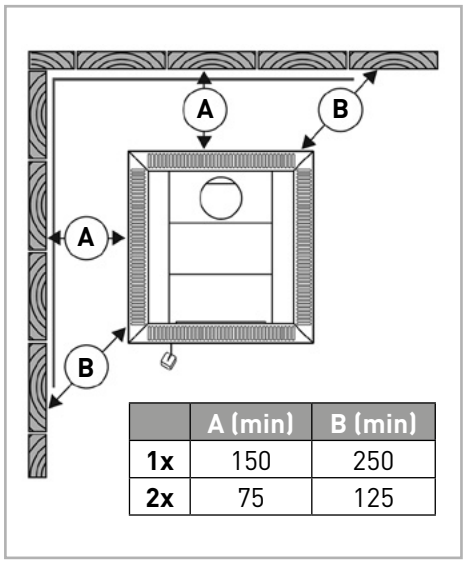

	A (min)	B (min)
1x	150	250
2x	75	125

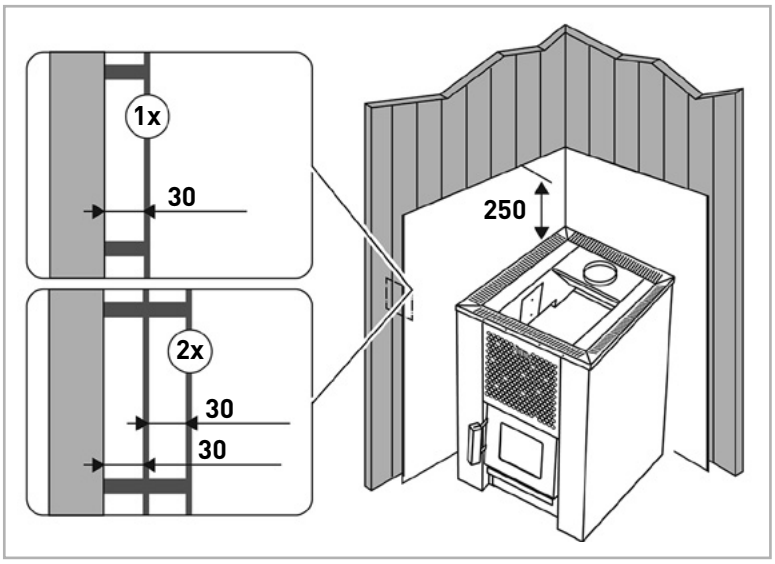

5. Heater assembly and installation

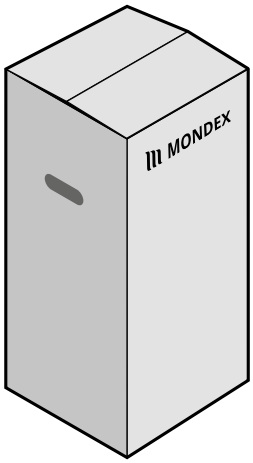

Storage
Store the heater in its original package in an upright position and in a warm and dry location until it is installed.

Delivery content
The heater stones are not included in the delivery. Inspect the heater components visually. If you notice any discrepancies or deficiencies, please contact the store where you purchased the heater. Do not expose heater parts to blows and denting when taking them out of the package. The sauna's floor surface should also be properly protected before you begin the installation.

Before installation

1) Prior to installation, ensure that the safety distance requirements are met.

2) There should not be any electrical equipment or wires or inflammable materials within the safety distances of the heater.

3) Please also note the safety distances of the chimney flue! If the safety distance requirements are not met, additional protective materials must be used.

4) For more detailed instructions on fire safety provisions, please contact the fire authorities.

Preheating

Pre-heat the heater outdoors or in a well-ventilated area. The surface of the heater is painted. Some of the paint will burn out during the first heating, which results in the heater body emitting smoke. When no more smoke is emitted, the heater is ready for use.

If the heater is preheated outdoors, chimney pipes should be fitted to ensure a proper draught and to burn off any protective coatings on them.

The surface treatment of the heater achieves its final strength during the first heating of the heater. Avoid rubbing or wiping the painted surfaces of the heater before the first heating.

For the first heating, one load (about 5 kg) of wood is sufficient.

Pre-heat the heater without stones. Stack the stones into the heater only when the heater has cooled down completely after the preheating.

Always keep the firebox door closed during the preheating!

Do not throw water on the heater during the preheating. Doing so may damage the paint coating.

Observe the safety distances between the heater and any inflammable material in accordance with the instructions (see page 7) when installing the heater.

In the model with a water tank, the tank must be full when you heat up the heater for the first time.

Note! Remove all plastic film before using the heater.

Chimney flue

The heater can be safely installed in a T600 temperature rated chimney flue, unless other instructions have been given. The inside diameter of the flue chimney pipe must be 115 mm. The recommended draught of the chimney flue is approximately -12 Pa.

The heater can be connected to the chimney flue either from the rear or top of the heater. The unused opening in the heater is closed with the cover plate supplied. The heater also comes with a short connection flue pipe for connecting the heater to the chimney flue from the rear.

The connection flue pipe must not be installed too deeply into the chimney flue because it will block the draught. Leaks in the chimney flue also weaken the draught of the heater, and, therefore, the flue connection must always be sealed with a fire-proof sealing material. If the flue connection leaks, the flue gases produced by the heater may ignite in the chimney. The chimney flue and the connection pipes must be swept regularly according to the instructions provided by the law.

Connecting the heater to the brickwork flue via the rear chimney duct opening

Make a hole in the firewall for the flue connection. Note the height of any floor protection when determining the height of the hole. The hole should be slightly larger than the chimney pipe. A suitable gap around the chimney pipe is about 10 mm. The inner corners of the flue hole should be rounded so that the flue gases can enter the flue unobstructed. The heater is not suitable for installation in a split flue.

Attach the chimney pipe to the rear chimney duct opening of the heater. Make sure that the pipe connection is tight and secure. If necessary, tap with a hammer.

Push the heater into place. Do not push the chimney pipe too far into the flue since it may obstruct the flue. Shorten the pipe if necessary. Seal the chimney pipe to the hole in the firewall with fireproof mineral wool, for example. Ensure that the chimney pipe connection is tight and, if necessary, add more fire-resistant mineral wool.

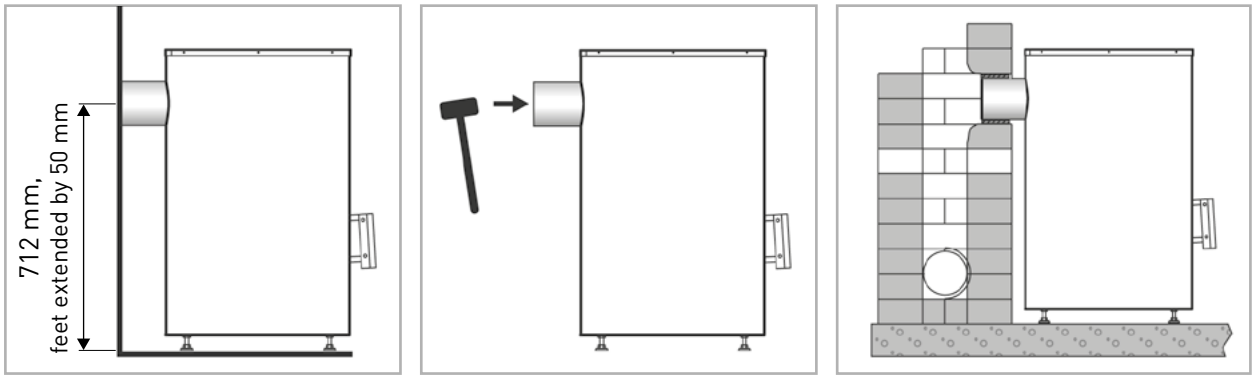

Connecting the heater to a brickwork flue via the upper chimney duct opening

The chimney pipes used in the upper connection can be straight or in an angle of 45° or 90°. Move the cover plate to the rear opening. Attach the chimney pipe to the upper chimney duct opening of the heater. Make sure that the pipe connection is tight and secure. The heater is not suitable for installation in a split flue.

Push the heater into place. Do not push the chimney pipe too far into the flue since it may obstruct the flue. Shorten the pipe if necessary.

Seal the chimney pipe to the opening in the firewall with fireproof mineral wool, for example. Ensure that the chimney pipe connection is tight and, if necessary, add more fire-resistant mineral wool.

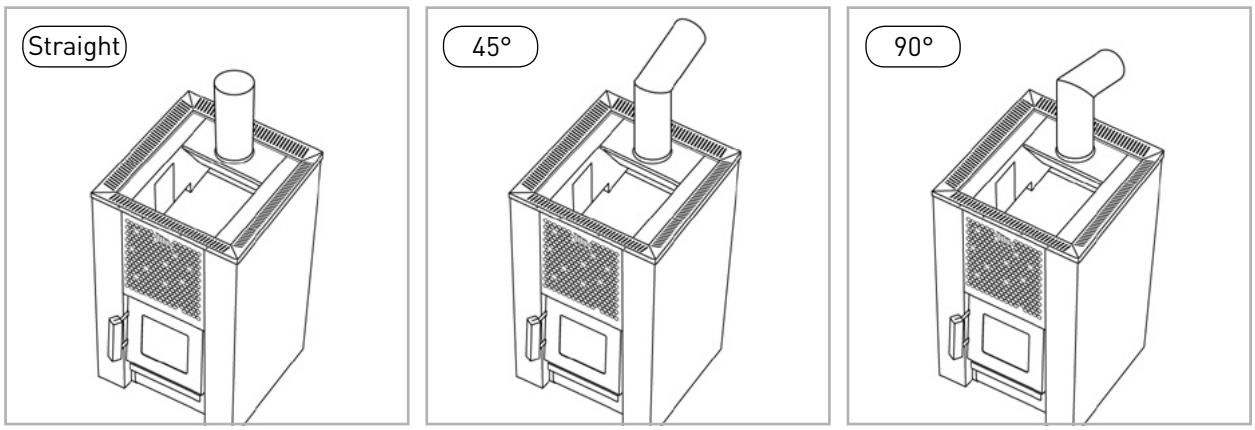

Changing the handing of the door

You can install the door of the firebox to open either to the right or to the left.

1) Lift the hinge pin from the lower bracket.
2) Tilt the bottom end of the door outwards and pull the hinge pin out of the upper bracket while holding the door.
3) Change the handing of the door and insert the hinge pin in the upper bracket.
4) Align the hinge pin with the lower bracket and let the hinge pin drop through the bracket and the hole in the door.

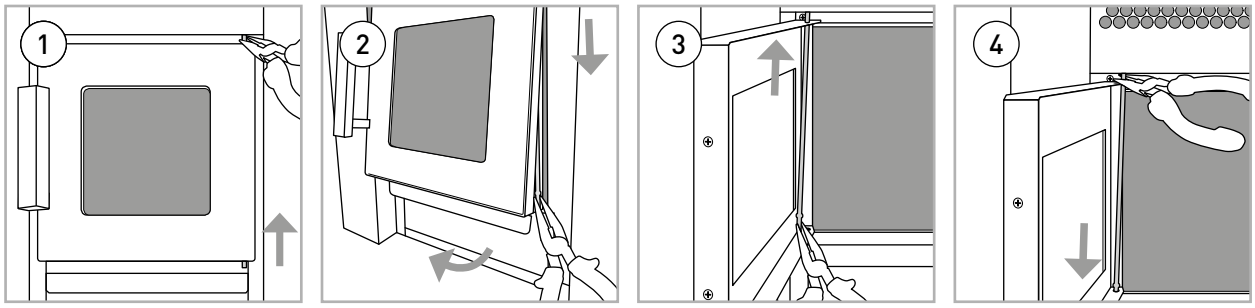

Switching the side of the water tank

Switch the side of the water tank as follows:

5) Use a drill to detach the pop rivets (3.2 mm, 12 pcs) of the upper grille.
6) Unscrew the Torx fastening screws of the jackets (6 pcs in front and 6 pcs in rear).
7) Lift up the water tank and place it on the other side of the heater.
8) Detach the plate covering the tap aperture from the jacket on the side of the tank. Screw the outer jackets back into place and reattach the grille with rivets (12 pcs, pop rivets 3.2 x 6 mm steel, round head).

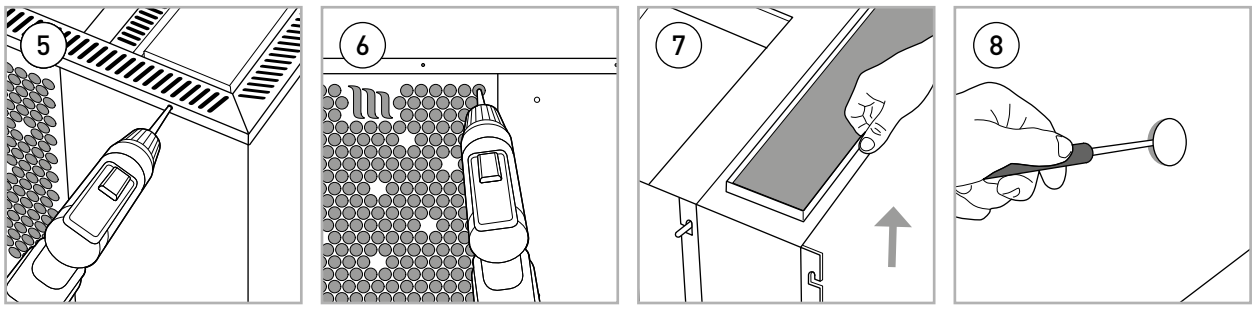

Stacking the stones

Only use stones intended for sauna heaters. Suitable stones include peridotite, olivine diabase, and olivine. To ensure adequate circulation of air in the heater, the most suitable stone size to be placed on top of the firebox is 10–15 cm in diameter. You need three boxes of stones. Stones collected from the nature are not suitable as heater stones. Using regularly shaped (e.g. rectangular), light or ceramic stones is prohibited due to the risk of stacking them too tightly.

Rinse any dust off of the heater stones before stacking them in the heater. Stack bigger stones on the bottom of the stone compartment and the smaller stones to the top. Ensure proper air circulation between the stones by stacking them loosely, however do not make a heap on top of the heater. Also, do not stack stones on top of the grille around the stone compartment.

Stacking the stones loosely ensures the ventilation in the heater remains unobstructed. Stacking the stones in this manner also shortens the heating time. Continue stacking gradually in this manner until all stones have been placed. Do not make a heap of stones on top of the heater!

Do not use the heater without the stones!

Dents caused by the user are not covered by Mondex's warranty or other product liability. When stacking the stones, be careful not to dent the heater's metal surfaces to avoid damaging them. For more information on the warranty and replacing stones, see page 14.

Fuel

Dry wood is the best fuel for the heater. Only use natural firewood as fuel. Logs are dry when they make a clinking sound when they are knocked against each other. Since the moisture of firewood significantly affects the cleanliness of combustion as well as the efficiency of the heater, use only dry wood to fuel the heater. Suitable kindling material includes bark or newspaper.

Store the fuel in the fuel storage. A small quantity of firewood can also be stored in the vicinity of the heater, as long as the firewood temperature does not exceed 80 °C.

Do not burn the following materials in the heater:
- Chipboard, plastic, coal, briquettes, pellets, or other such fuels with a high calorific value.
- Painted or impregnated wood.
- Waste (for example, PVC plastics, textiles, leather, rubber, disposable diapers).
- Garden waste (for example, grass, leaves).

Installing a tap in the model with a water tank

Install one of the sealing rings on the tap. Insert the tap in the aperture in the tank. Attach the other sealing ring to the threaded end of the tap from inside the tank, and then insert and tighten the nut. Use a properly sized wrench to tighten the nut from the inside of the tank. Be sure not to tighten them so much that the sealing rings are damaged.

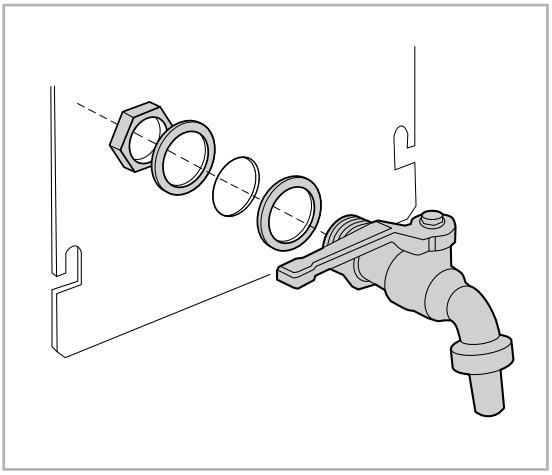

Empty the water tank before cold weather, because allowing water to freeze in it will damage the tank. Do not heat up the heater if the water tank is empty.

6. Using the Motti heater

Warming up the heater

Before warming up the heater, ensure that there are no foreign objects that could create a fire hazard in the sauna or within the safety distances of the heater. Note that exhaust air blowers operating in the same space as the heater may cause problems.

Empty the ash pan to ensure efficient and clean combustion.

Stack the firewood in the firebox loosely to let combustion air reach between the logs. Place larger logs on the bottom and the smallest one on top. Use logs with a diameter of about 8–12 cm. Fill approximately 2/3 of the firebox with wood.

Place the kindling on top of the wood. Lighting the wood from the top generates the least emissions.

Keep the ash box door ajar by approximately 10–15 mm during kindling and combustion to allow the firebox to receive replacement air through the ash box door. The firebox door must be kept closed to prevent smoke from entering the room, with the exception of during kindling, adding firewood and removing leftover materials.

Adding a few logs when needed is sufficient to maintain an adequate heater temperature for the duration of the sauna.

Firewood		
length	Initial filling	First load
approximately 38 cm	Approx. 4 kg	3 kg

Water thrown on heater

We recommend using hand warm water. The water should be fresh household water. Throwing the water onto the heater sides / lower stones generates softer steam. If you want steam that feels hotter and more intense, pour plenty of warm water on top of the heater all at once. **Do not use sea water or water that contains chlorine.**

Quality requirements of drinking water			
Humus content	< 12 mg/l	Calcium content	< 100 mg/l
Iron content	< 0.2 mg/l	Manganese content	< 0.05 mg/l

Maintenance and service

Always empty the ash pan of the heater before each new heating to enable the combustion air conducted through the ash pan to cool off the grate and extend the service life of the grate. Use a container made of metal, and preferably equipped with feet, for the ashes.

The ash container must not be stored in the vicinity of inflammable materials, as there may be glowing embers in the ashes removed from the heater. They may cause a risk of fire.

In case of a chimney fire, close the doors of the heater ash pan and firebox and the smoke damper. (If installed) The local fire authorities must be notified of a chimney fire. After a chimney fire, a chimney sweeper must inspect the condition of both the heater and flue before the heater can be used again.

The soot and ash accumulated in the smoke ducts of the heater must be removed periodically through the sweeping openings in the heater's outer flue ducts.

Due to the extensive thermal fluctuations, the heater stones erode and crumble during heater use. Stack the stones again at least once a year and more frequently in heavy use. Also replace any eroded stones. When replacing the sauna stones, also remove the stone debris accumulated in the stone compartment.

Wipe the dust and dirt off of the heater with a damp cloth.

Do not alter the structure of the product. Use only accessories approved by the manufacturer.

Maintenance and spare parts

In case of a fault that cannot be solved, please contact the manufacturer's technical support, info@mondex.fi. Spare parts can be purchased from Mondex distributors and the manufacturer. When purchasing spare parts, please refer to the name, power, serial number and manufacturing date of the heater to ensure you receive the correct parts.

Warranty

In household use, the heater has one (1) year warranty. In commercial/professional use, the warranty is three (3) months. Commercial use refers to facilities in which the heater is in use on a continuous basis, such as fitness centres, swimming pools, housing companies etc. It is not recommended that the heater is on for longer than six (6) hours at a time. Retain the sales receipt or warranty card. The warranty does not cover external or internal mechanical damage caused by, for example, the impacts of stones or the heater falling over. The warranty also does not cover defects caused by acts of nature. Please also see chapter "Changing the heater stones". Removing or re-stacking of heater stones are not covered by the warranty in a potential warranty maintenance. The manufacturer will not compensate the buyer for expenses incurred by a product defect or malfunction, loss caused by disruption of business operations, or any other direct or indirect damage. For more detailed warranty terms and conditions, please see www.mondex.fi/product support.

Changing the heater stones

Re-stack the heater stones and replace any eroded stones annually (every three months in commercial/professional use). Also, remove the stone debris accumulated in the stone compartment. A good condition and proper, spacious stacking of the stones on top of the firebox inside the heater ensure sufficient air flow. If this is not carried out annually, the air flow may be obstructed, resulting in the firebox burning out prematurely, which is not covered by the warranty.

7. Troubleshooting

No draught in chimney, smoke enters the sauna

- The flue connection leaks → Seal the connection.
- The brick chimney flue is cold.
- Underpressure in the apartment caused by a cooker hood, another furnace or other device → Ensure the supply of replacement air.
- The ash pan is full.
- The flue ducts of the heater are blocked.
- The flue connection pipe is too deep in the flue.

Sauna fails to heat

- The sauna is too large for the heating capacity of the heater.
- There is a lot of uninsulated wall surface in the sauna.
- The wood used as fuel is wet or of low quality.
- The draught of the flue is poor.
- The flue ducts of the heater are blocked.

Heater stones fail to heat

- The sauna is too small for the heating capacity of the heater.
- The draught of the flue is poor.
- The wood used as fuel is wet or of low quality.
- The flue ducts of the heater are blocked.
- Check the placement of the stones. Remove the stone debris accumulated in the stone compartment and stones that are too small (diameter less than 10 cm) from the top of the firebox. Replace any eroded stones with larger, intact heater stones.
- There are too many stones; do not make a heap of stones extending higher than the top surface of the heater.

Heater generates odours

- A hot heater may intensify the odours mixed in the air; however, these do not originate from the sauna or the heater. Examples include paints, glues, heating oils, spices.

Effect of heating on the sauna room

- Darkening of the wood surfaces due to the ashes, stone chippings and metal flakes from the heater is normal. For this reason, we recommend that dark floor coatings and seam materials be used.
- Darkening can be intensified by direct sunlight, heat radiated by the heater to the wall surfaces, protective materials intended for wall surfaces (poorly heat-resistant), fine stone aggregates crumbling from stones, and smoke which enters the sauna when adding firewood, for example.
- When the installation instructions provided by the manufacturer are followed, the heater does not cause the inflammable materials of the sauna room to become dangerously hot.

Heater maintenance history

We recommend changing the heater stones at one-year intervals. Change them more regularly if the heater is used often.

Date	Action

Mondex Motti Premec Oy 19 EN 15821:2010	Installation identification code: Performance level:	NB2450 AVCP 3
Follow the operating instructions. Only use natural firewood as fuel. The heater is not suitable for installation in a split flue.		
Fire safety: (Ignition, fire risk)		Approved
Declared safety distance to combustible materials:	in the rear: to the sides: to the ceiling:	300 mm 300 mm 1350 mm
Chimney diameter:		115 mm
Flue gas temperature:		325 °C
Rated power and efficiency, declared		
Carbon monoxide emissions with 13% oxygen concentration (O_2)		Approved (0.21%)
Overall efficiency		Approved (71%)
Flue duct draught		12.1 Pa
Rated power		22 kW
Heat production to the room		14 kW
Fuel increases		4 kg + 3 kg = 7 kg
Durability		Approved

MONDEX

TEHTY SUOMESSA
MADE IN FINLAND

Premec Oy
Kettukallionkatu 4
84100 Ylivieska,
Finland
info@mondex.fi
www.mondex.fi

Technical support: info@mondex.fi